SERIES 8146 DISTRIBUTION PANELS

Standard Lighting and Heating Panels Series 8146

- Explosion protection to
  - CENELEC
  - IEC
- Can be used in
  - Zone 1 and Zone 2
  - Zone 21 and Zone 22
- Available versions
  - With MCB, tripping characteristics C
  - With MCB / ELCB, tripping characteristics B or C
- Advantages
  - Installation of the miniature circuit-breakers under hinged inspection windows
  - Operation of the breakers externally
  - Switch setting visible at all times
  - Operation under voltage
  - Short time of delivery

The standard distribution panels are build with MCB's ex stock. The following data sheet shows versions with 16A nominated current only. Others with 10, 20, 25 A are also available. These distribution panels are deliverable within 2 weeks ex works!

Technical Data	
Explosion protection	
Gas explosion protection	Ex II 2 G EEx ed IIC T4
Dust explosion protection	Ex II 2 D IP66 T130 °C
Certificates	
Gas explosion protection	PTB 01 ATEX 1024
Dust explosion protection	LCIE 02 ATEX 6241
Rated voltage	415 V / 240 V, AC
Rated current	80 A
Terminal cross sections	
flexible leads	35 mm^2
Ambient temperature	- 20 °C ... + 40 °C
Degree of protection	IP 66 (EN 60529)
Enclosure material	Polyester resin, dark grey similar to RAL 7024, impact strength ≥ 7 Nm, surface resistance ≤ 10^9 Ohm. Material self-extinguishing and flame resistant

Supplied by: A.S.P. Electro-Technology Ltd
Tel: +44 (0)1455 635796 Fax: +44 (0)1455 251110
Email: sales@asp-electro-tech.com. www.asp-electro-tech.com

Selection table

Version	MCB Quantity	MCB Characteristics	Layout No.	Cable entries	Ordering code
Lighting panels with MCB 1 pole 16 A wiring on terminal blocks	6	C	01	1 x M 40, 6 x M 25, 1 x M 16	**8146/5-ExV-01-06L16C1P-T**
	12	C	02	1 x M 50, 12 x M 25, 1 x M 16	**8146/5-ExV-02-12L16C1P-T**
	18	C	03	1 x M 50, 18 x M 25, 1 x M 16	**8146/5-ExV-03-18L16C1P-T**
	24	C	04	1 x M 50, 24 x M 25, 1 x M 16	**8146/5-ExV-04-24L16C1P-T**

Schematic

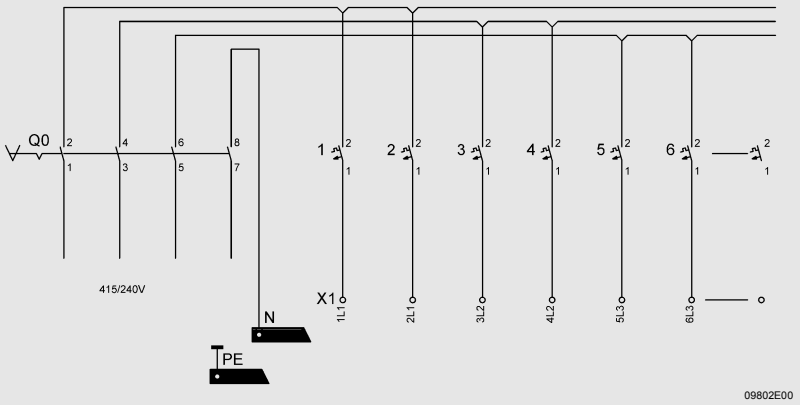

Selection table

Version	MCB Quantity	MCB Characteristics	Layout No.	Cable entries	Ordering code
Lighting panels with MCB 1-pole 16 A mattress wiring	6	C	06	1 x M 40, 6 x M 25, 1 x M 16	**8146/5-ExV-06-06L16C1P-D**
	12	C	07	1 x M 50, 12 x M 25, 1 x M 16	**8146/5-ExV-07-12L16C1P-D**

Schematic

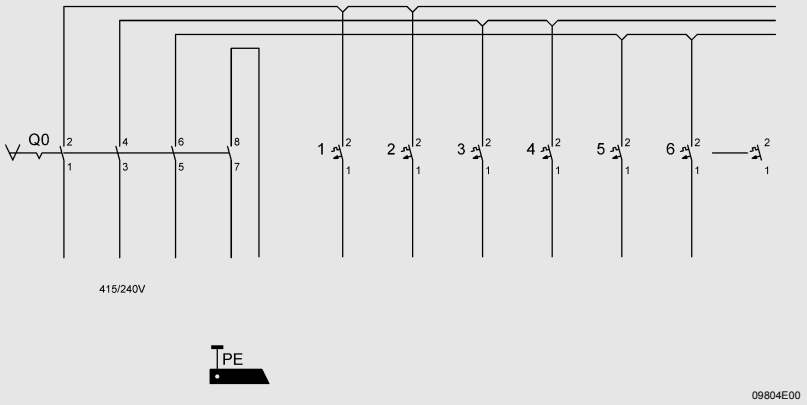

Selection table

Version	MCB / ELCB Quantity	MCB / ELCB Characteristics	Layout No.	Cable entries	Ordering code
Heating panels with MCB / ELCB 1 pole + N 16 A / 30 mA wiring on terminal blocks	8	B	02	1 x M 40, 8 x M 25, 1 x M 16	**8146/5-ExV-02-08H16B1N-T**
	12	B	03	1 x M 50, 12 x M 25, 1 x M 16	**8146/5-ExV-03-12H16B1N-T**
	24	B	05	1 x M 50, 24 x M 25, 1 x M 16	**8146/5-ExV-05-24H16B1N-T**
	8	C	02	1 x M 40, 8 x M 25, 1 x M 16	**8146/5-ExV-02-08H16C1N-T**
	12	C	03	1 x M 50, 12 x M 25, 1 x M 16	**8146/5-ExV-03-12H16C1N-T**
	24	C	05	1 x M 50, 24 x M 25, 1 x M 16	**8146/5-ExV-05-24H16C1N-T**

Schematic

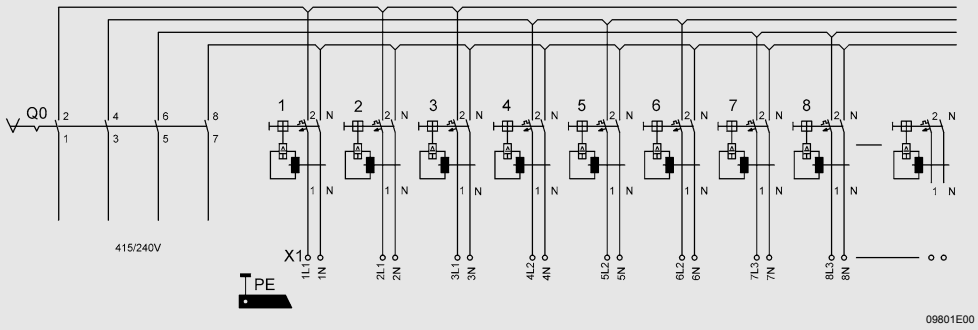

Selection table

Version	MCB / ELCB Quantity	MCB / ELCB Characteristics	Layout No.	Cable entries	Ordering code
Heating panels with MCB / ELCB 1 pole + N 16 A / 30 mA mattress wiring	8	B	07	1 x M 40, 8 x M 25, 1 x M 16	**8146/5-ExV-07-08H16B1N-D**
	8	C	07	1 x M 40, 8 x M 25, 1 x M 16	**8146/5-ExV-07-08H16C1N-D**

Schematic

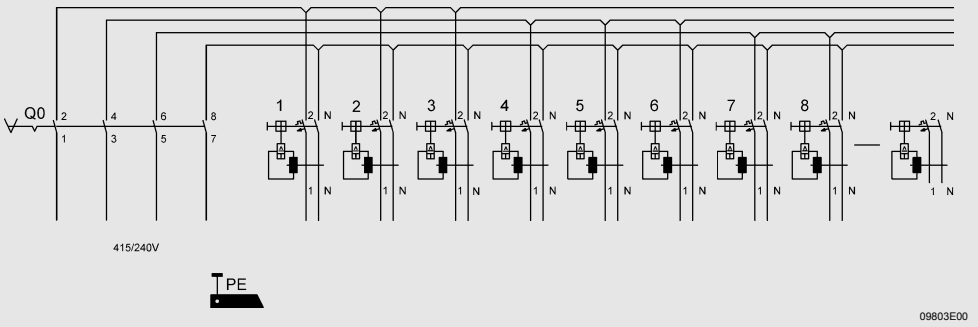

Dimension drawings (all dimensions in mm) - subject to alterations

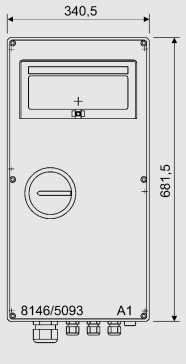

Layout 01

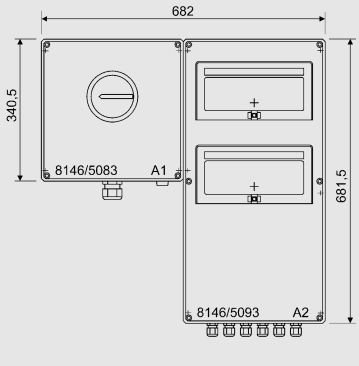

Layout 02

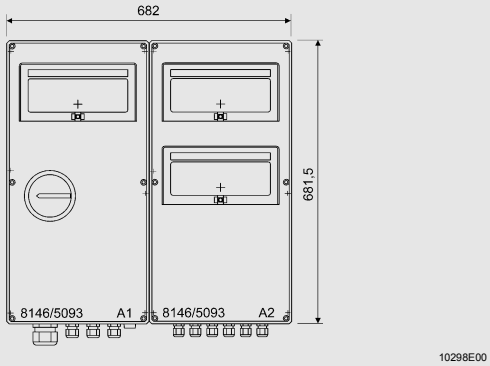

Layout 03

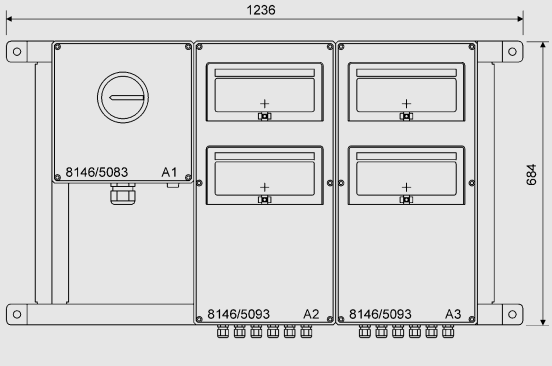

Layout 04

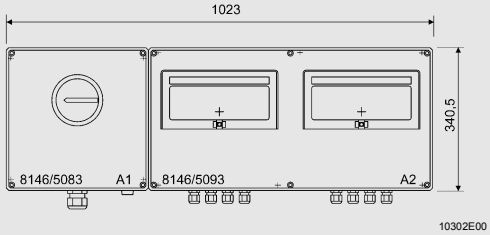

Layout 07

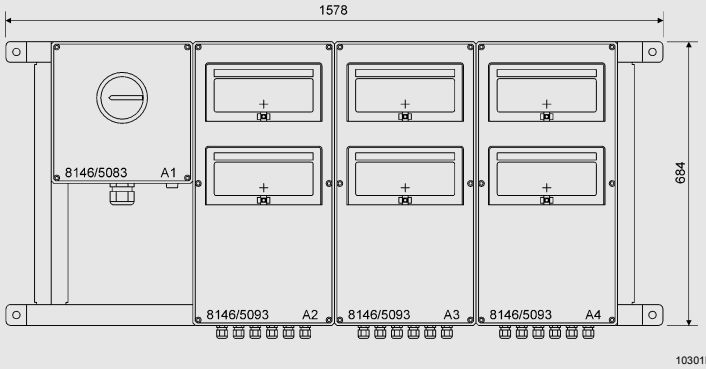

Layout 05

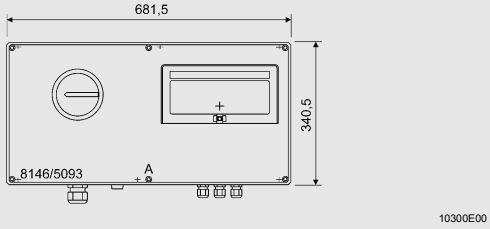

Layout 06

Supplied by:

A.S.P. Electro-Technology Ltd
Specialist Suppliers of Hazardous Area Certified Electrical Products & Instrumentation

39 London Road, Hinckley, LE10 1HQ. U.K.
Tel: +44 (0)1455 635796 Fax: +44 (0)1455 251110
Email: sales@asp-electro-tech.com Web: www.asp-electro-tech.com

This publication is not intended to form the basis of a contract. All the above specifications, dimensions, weights, tolerances etc are typical and may be varied or changed by the manufacturer without prior notice. A.S.P. Electro-Technology accept no liability for consequence of use.